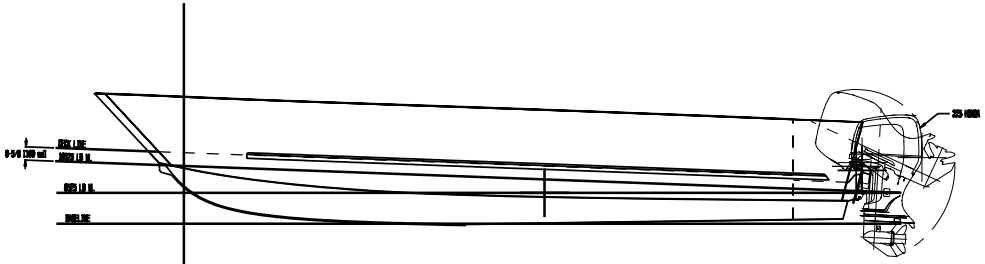

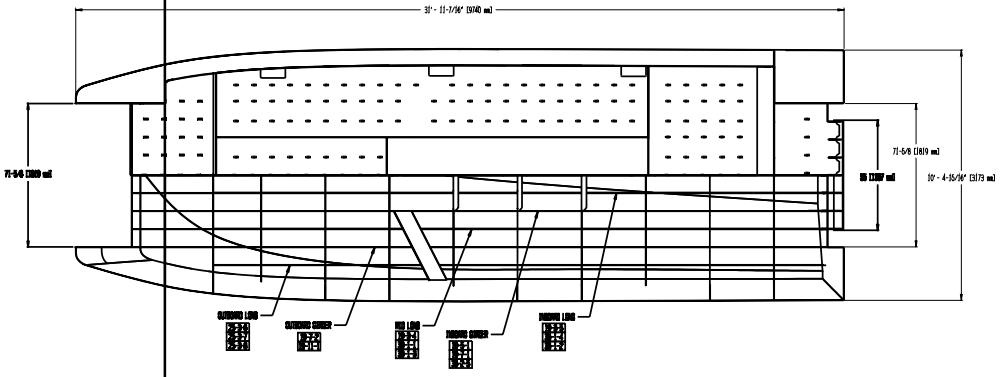

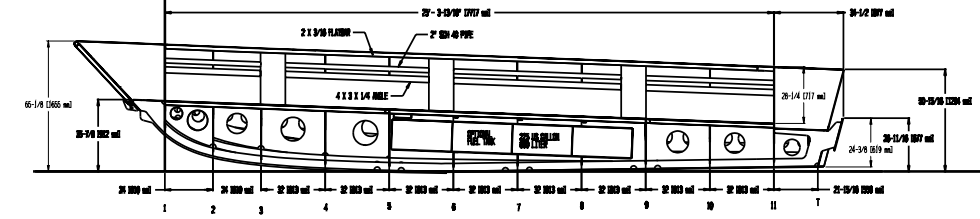

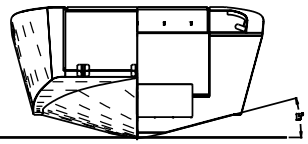

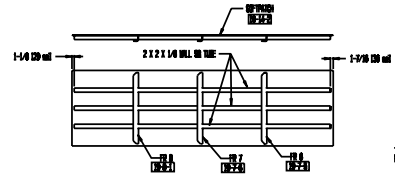

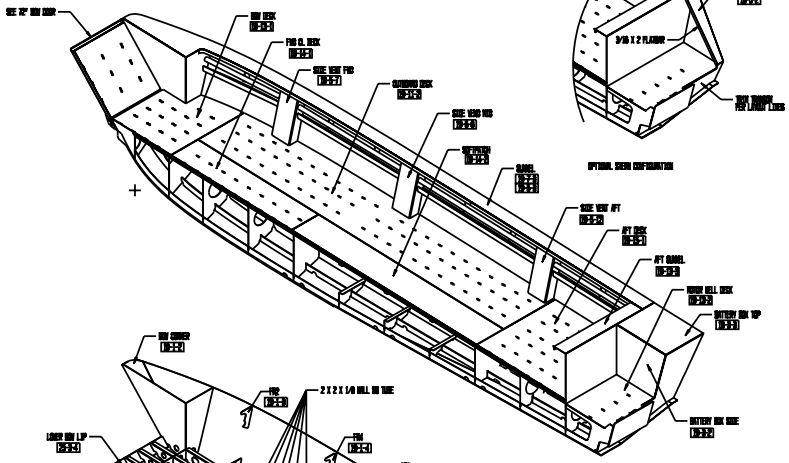

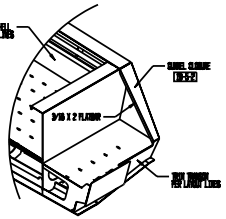

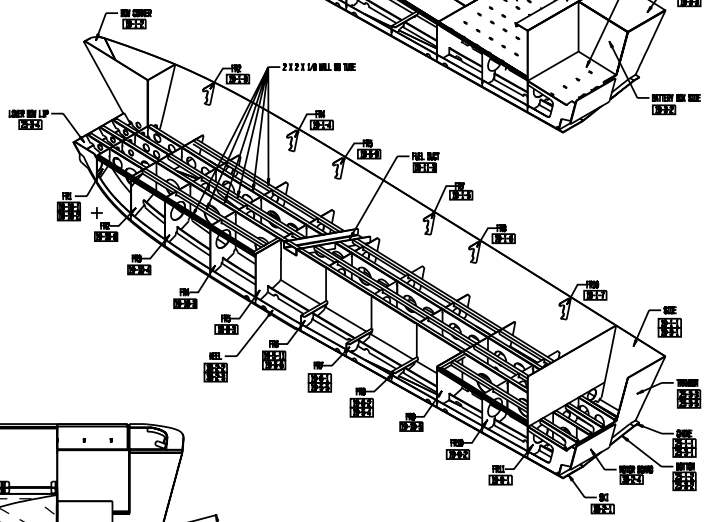

03/27/07

SPECIALTY MARINE
PO BOX 1001, SCAPPOOSE, OR.97056

COPYRIGHT

32 X 10.5 LANDING CRAFT GENERAL ARRANGEMENT

SIZE	FSCM NO.	DWG NO.	REV
		1216 VIEWS	B

SCALE 3/8"=1'0" SHEET